INP-75A0033MIB

Articlenumber: 240083

Short description

Network PTZ Dome Camera, 33x AFZ, 2952x1944, Day & Night, WDR, AI 4,3-142mm, Alarm, Audio, IR, 12VDC, PoE+, IP66



Key features

- 1/2.7" CMOS sensor, maximum resolution 5 MP/30fps
- AI analysis functions including object classification
- WDR 120dB, 3D-DNR Noise Reduction
- Motorized autofocus zoom lens 33x 4.3-142mm
- Smart Codec H.265/H.264, multi-streaming
- Browser independent (IE, Edge, Safari, Firefox, Chrome)
- Supports ONVIF profiles S/T/G/M
- Local storage via Micro SD card
- Audio input and output, NDAA conform
- Power supply 12VDC, or PoE IEEE 802.3at
- IR LED illumination, IP66
- Wall bracket included

© Copyright VIDEOR E. Hartig GmbH - November 2026 - Subject to technical changes

Features

Product Labels	
EAN/GTIN	4260229840665
Manufacturer number	240083
Series	eneo IN-Serie
Camera	
Camera shape	PTZ
Chip size	1/2,7"
Resolution standard	5 MP
Photosensitivity	0,003 Lux bei F1,6
Recording sensor	CMOS, Chipset NT98528, OmniVision OS05A20
System	True Day&Night
Low Speed Shutter	Yes
Manual Electric Shutter (MES)	1-5~1-20,000sec.
Flickerless function	Yes
Backlight compensation	Yes
Day/night switching	Switchable IR Filter (ICR)
Day/night mode	Automatic, Night, Time
White balance	Automatic, Manual
Video	
Resolution (extended)	2592x1944 (4:3), 2592x1520 (16:9), 2048x1536 (4:3), 2304x1296 (16:9), 1920x1080 (16:9), 1280x960 (4:3), 1280x720 (16:9), 640x480 (4:3), 320x240 (4:3)
Picture size	16:9, 4:3
Video Compression	H.264, H.265, H.264+, H.265+, M-JPEG
Data stream types	Triple-Stream(Main/Sub/Mobile)
Image transfer rate max.	30 fps
Lens	
Lens Type	Auto Focus Zoom
Focal length	4,3 - 142 mm
MOD (Minimum Object Distance)	1.5 m
Aperture Range (F)	F1.6
Vertical angle of view	41,6° - 1,7°
Horizontal angle of view	55° - 2,3°

© Copyright VIDEOR E. Hartig GmbH - November 2026 - Subject to technical changes

Continuation Features

Iris Control	DC
Zoomfactor (optical)	33
Display / Presentation	
Image resolution max.	2592x1944
DORI	
Perceiving (25px/m)	107 - 2574 m
Watch (62px/m)	42,5 - 1039 m
Detect (125px/m)	20,7 - 518 m
Identify (250px/m)	10 - 258 m
Features	
Multicast	Yes
Motion detector	Yes
Analysis	Intrusion (PID), Line crossing (LCD), Passage count (CC), Heat Map (HM), Face Capture (FD), Face Recognition (FR), Manipulation (TD), License plate recognition (LPR), License plate recognition (LPD), Intrusion, Face Attributes (AD), Enter Region, Crowds (CD), Attendance (FA), Abandoned and Removed Objects (SOD), Leave Region, Object Classification Human / Vehicle (PD&VD), Queues (QD), Rare Sounds (RSD), Motion tracking
Alarm processing	recording internal storage (SD card), E-Mail, FTP, Cloud Upload
Tours	1 selectable tour
Turning range	360
Speed (manual control)	200 °/sec
Speed (Target Approach)	200 °/sec
Audio support	Yes
Audio	2 Way Audio
Password	Administrator and User
Internal memory	microSDHC card, microSDXC card, 256GB
Menu languages	English, German, French, Italian, Portuguese, Spanish, Turkish, Russian, Japanese
Browser	Safari, Firefox, Google Chrome, Edge
Digital Noise Reduction (DNR)	Yes
Privacy Zone	Areas-ON/OFF switchable
Network	
Security	IP address filtering, Password, Complicated password, IEEE 802.1X-Authentication (available from firmware version 8.2.4.1)

© Copyright VIDEOR E. Hartig GmbH - November 2026 - Subject to technical changes

Continuation Features

Network Protocols	IPv4, IPv6, HTTP, HTTPS, FTP, SMTP, UPnP, DNA, DDNS, NTP, RTSP, RTP, TCP-IP, UDP, DHCP, PPPoE, IEE 802.1
Interfaces / Inputs / Outputs	
External connections	RJ-45, Audio input, 12VDC input (DC plug), Alarm in/output, micro SD card slot 256 GB, connection cable approx.45cm
Ethernet interface	10Base-T, 100Base-TX
Alarm inputs	1
Control Interfaces	Ethernet
General	
Wide Dynamic Range (WDR)	WDR 120dB
Lighting	Infrared
Audio compression	G.711
Dimensions (WxHxD) (extended)	206,4×351,8mm
Weight	3.7 kg
Illumination range	Approx 150m
Color (Housing)	RAL9003, Pantone P 179-1 / Other colors available upon request
Housing type	Outside
Housing material	Aluminium
Heating	No
Camera Type	Domecamera
Power consumption	25.6 W
Mounting type	Wall
ONVIF	ONVIF Profile G, ONVIF Profile S, ONVIF Profile T, ONVIF Profile M
Power over Ethernet	IEEE 802.3at
ESC	1/5 ~ 1/20.000sec.
Protection	IP66
SDK	upon request
Power supply	12VDC, PoE+
Temperature Range (Operating)	-30°C ~ +60°C, @ Luftfeuchtigkeit 95% oder weniger (nicht kondensierend)
Text overlay	Switchable on/off
Scope of Delivery	
Scope of delivery	Quick installation guide, drilling template, wall bracket, 4x heavy-duty anchors, 1x Allen wrench, 1x waterproof cover for RJ45 connector

© Copyright VIDEOR E. Hartig GmbH - November 2026 - Subject to technical changes

Continuation Features

Notes	
Remark	Face and license plate recognition require an SD card or an eneo IN recorder. For optimal results, use only eneo components. For mixed brands, we offer a compatibility check for a fee (info: item #229235 at VIDEOR).

Optional Accessories

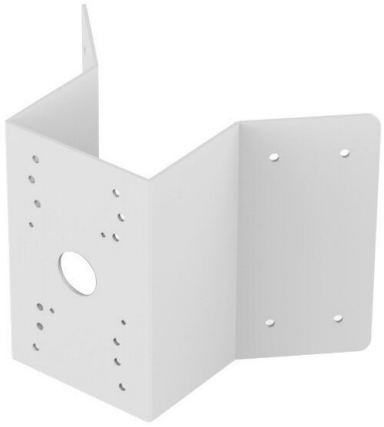

CM-22



PM-21



DOME-CH7



KBD-3NET

© Copyright VIDEOR E. Hartig GmbH - November 2026 - Subject to technical changes

Technical Drawing

Maße / Dimensions: mm

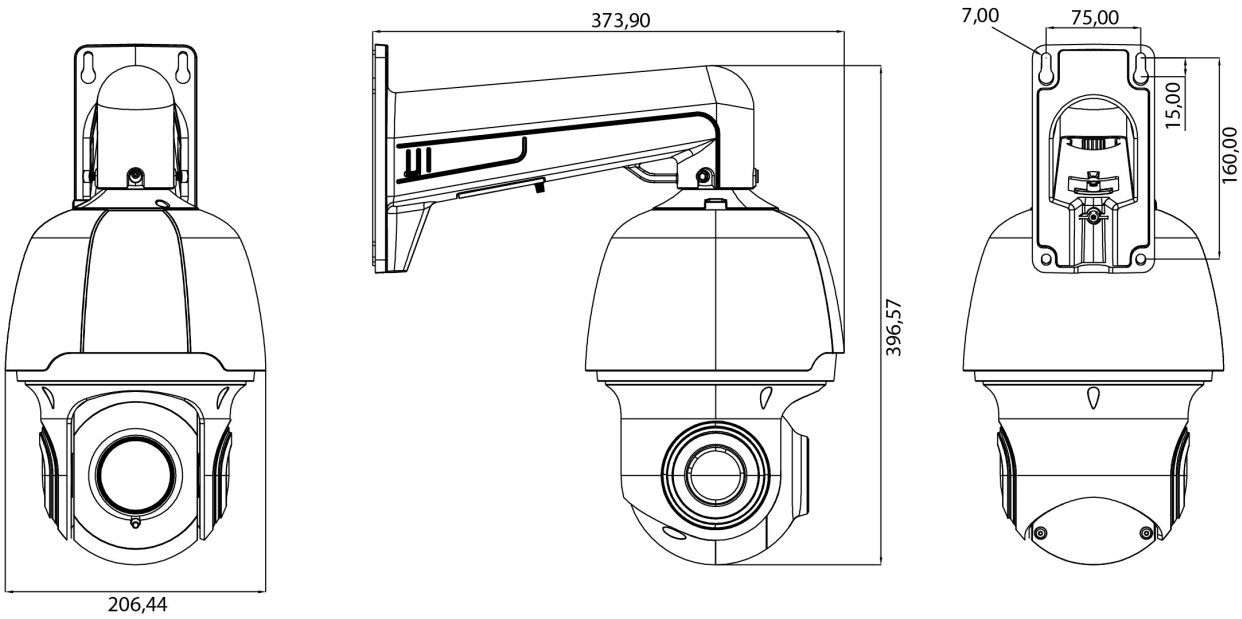

VSS NEDERLAND
VIDEO SYSTEMS

VSS Nederland B.V.
Tel. + 31 (0)38 42 89 420
E-mail info@vssnederland.nl
Website www.vssnederland.nl | www.vss.nl

© Copyright VIDEOR E. Hartig GmbH - November 2026 - Subject to technical changes